BRIEFING STRIP ™

ATIS	PRAGUE Radar (APP)	*RUZYNE Radar (APP)	RUZYNE Tower	*Ground
122.15	120.52 127.57	119.0	118.1	121.9

LOC PG	Final Apch Crs	GS D4.0 PG	ILS DA(H)	Apt Elev 1247′
*109.5	304°	2490′(1258′)	1432′(200′)	RWY 1232′

MISSED APCH: Climb on 304° to 4000′. Radar vectoring will be provided.
MISSED APCH WITH COMM FAILURE: Climb on 304° to 4000′. At D10.0 OKL turn RIGHT to VOR and climb to 5000′.

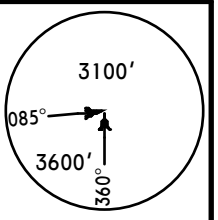

MSA OKL VOR

Alt Set: hPa (MM on req) Rwy Elev: 44 hPa Trans level: By ATC Trans alt: 5000′

1. DME required. 2. Acft not equipped for P-RNAV expect radar vectoring after IAF ARVEG.

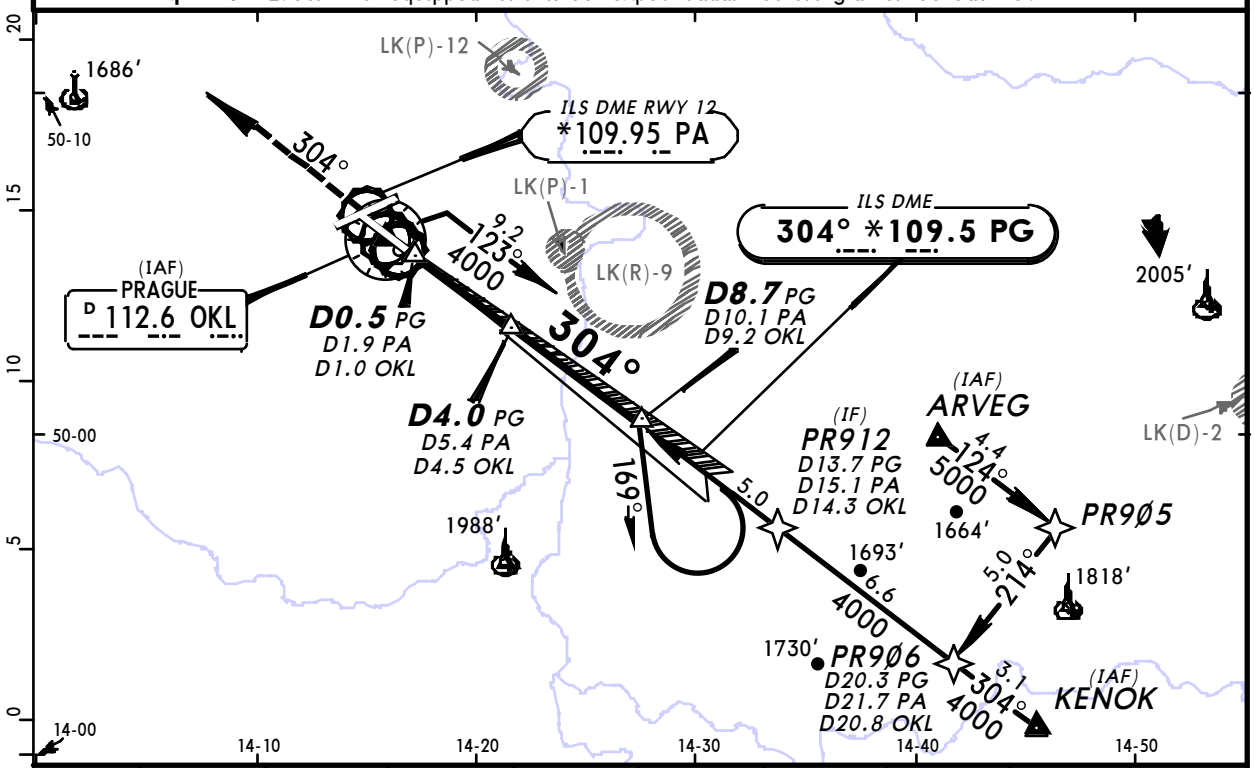

LOC (GS out)									
	PG DME	2.0	3.0	4.0	5.0	6.0	7.0	8.0	9.0
	PA DME	3.4	4.4	5.4	6.4	7.4	8.4	9.4	10.4
	OKL DME	2.5	3.5	4.5	5.5	6.5	7.5	8.5	9.5
	ALTITUDE	1850′	2170′	2490′	2810′	3130′	3450′	3760′	4080′

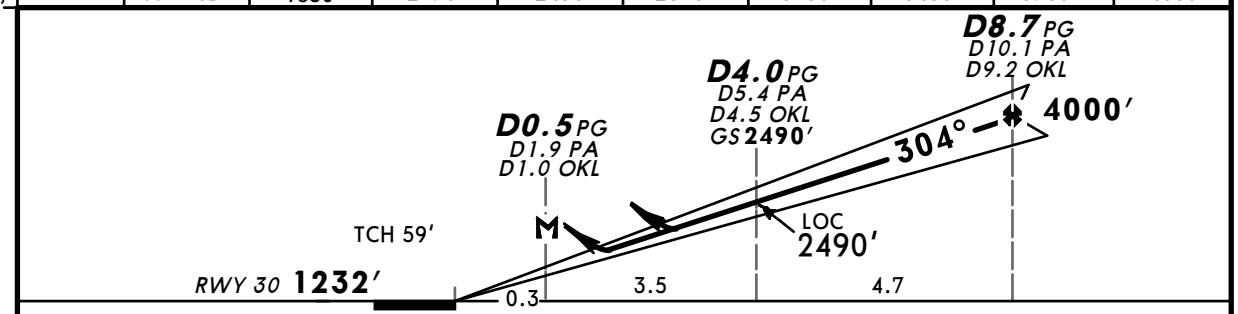

Gnd speed-Kts	70	90	100	120	140	160
ILS GS or LOC Descent Angle 3.00°	377	484	538	646	753	861
MAP at D0.5 PG/D1.9 PA/D1.0 OKL						

HIALS
PAPI
4000′ on 304°

PANS OPS

Standard STRAIGHT-IN LANDING RWY 30

	ILS DA(H) 1432′(200′) FULL	Limited	ALS out	LOC (GS out) DA(H) 1580′(348′)	ALS out
A	RVR 550m	RVR 750m	RVR 1200m	RVR 900m	RVR 1500m
B					
C					RVR 1600m
D					

CIRCLE-TO-LAND

Max Kts	MDA(H)	VIS
100	1650′(403′)	1500m
135	1750′(503′)	1600m
180	1850′(603′) [1]	2400m
D	NOT AUTHORIZED	

[1] Not authorized East of apt between extended RCL 06/24 & 12/30.

CHANGES: RWY 13/31 redesignated 12/30.

© JEPPESEN, 1999, 2012. ALL RIGHTS RESERVED.